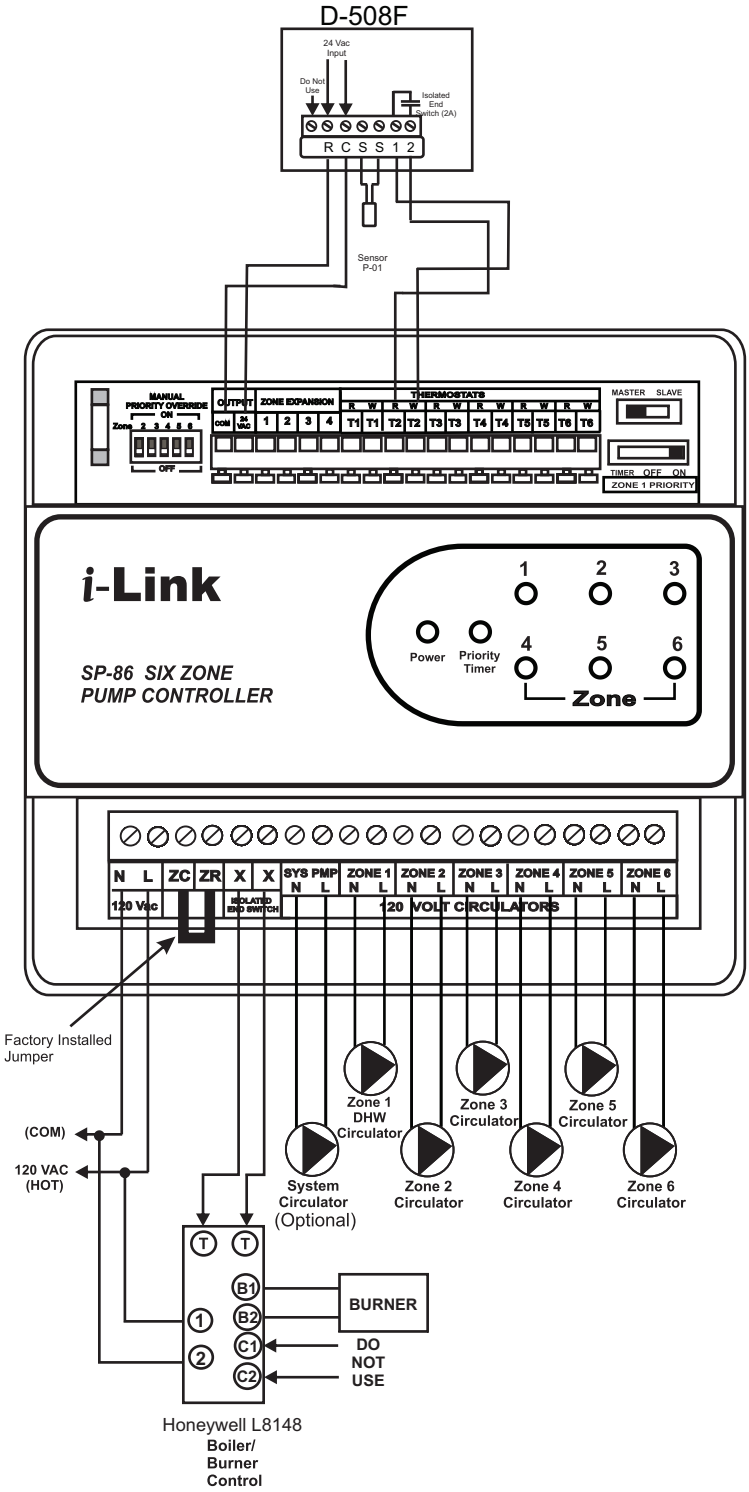TYPICAL WIRING DIAGRAMS WITH D-508F FLOOR HEATING THERMSOTAT